ELECTRO-HYDRAULIC HOLE PUNCHER

HPC-156WDF PARTS BREAKDOWN

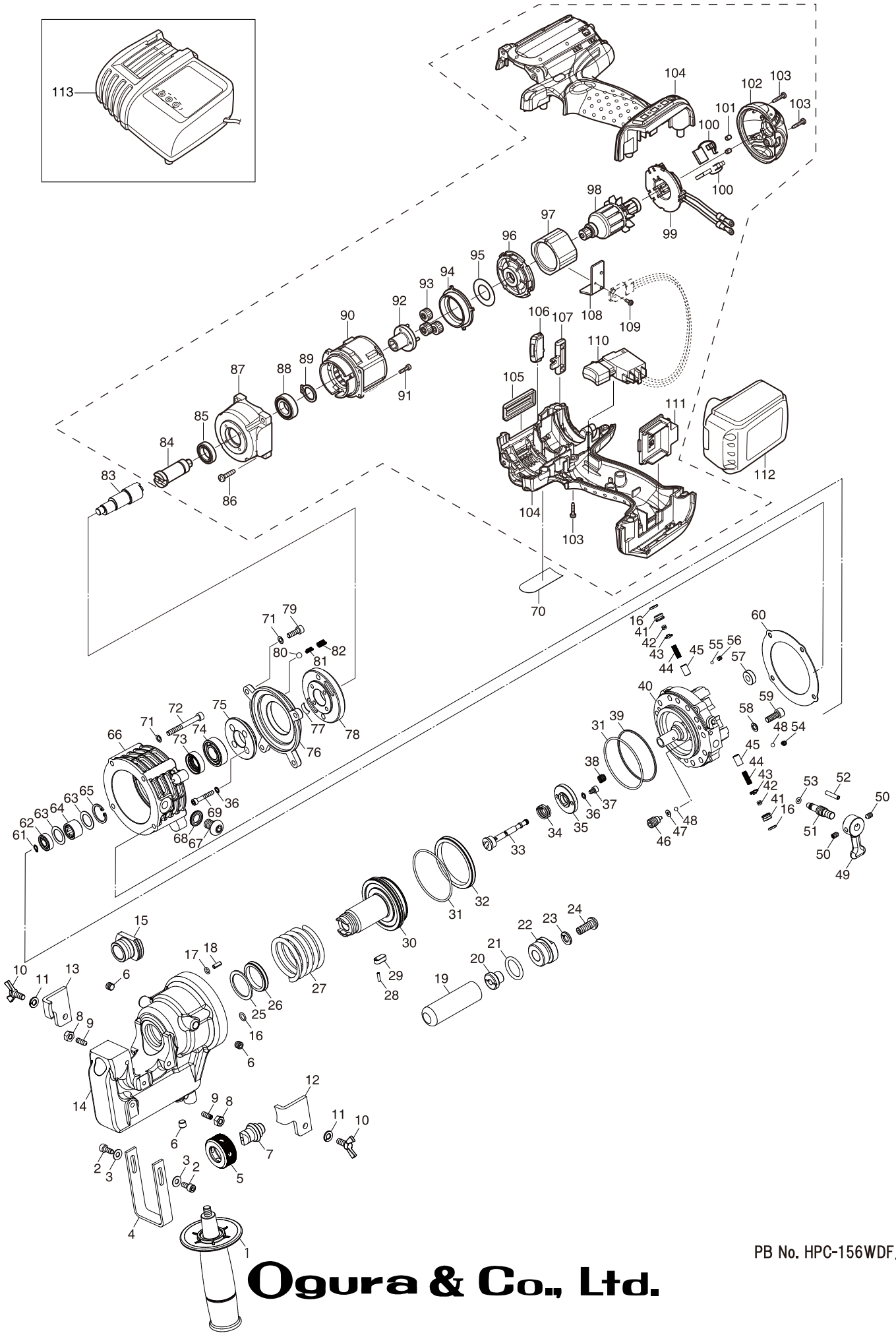

PB No. HPC-156WDF/1502

Ogura & Co., Ltd.